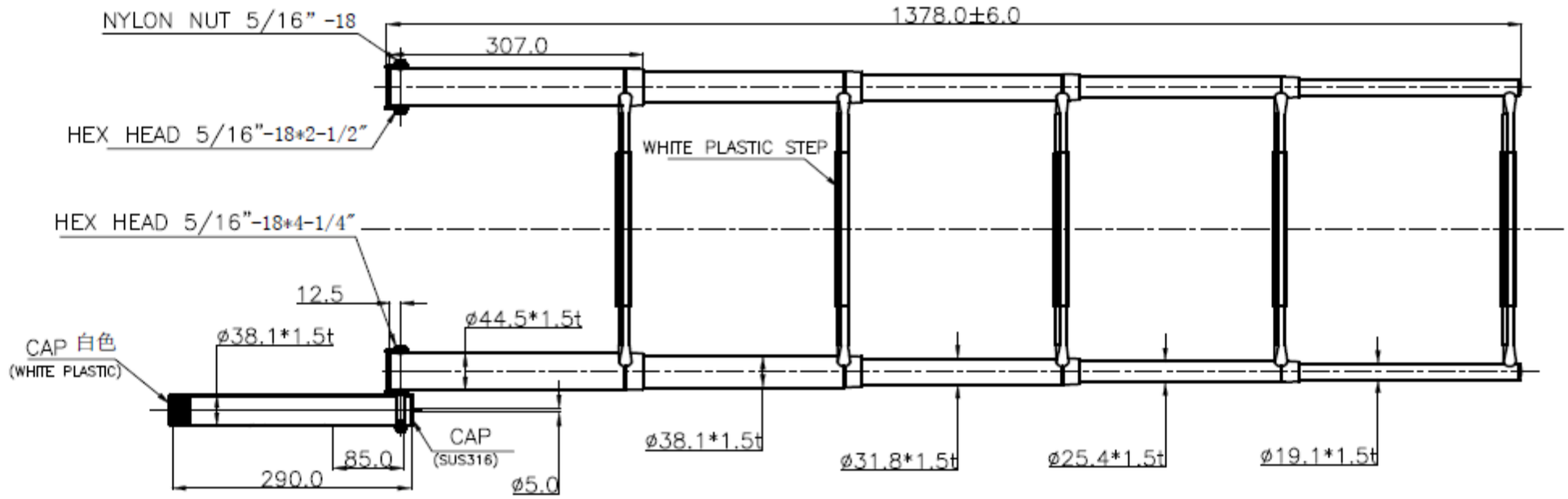


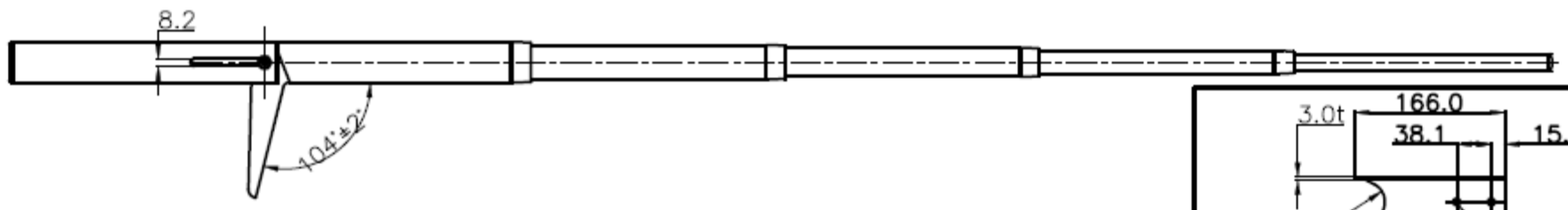


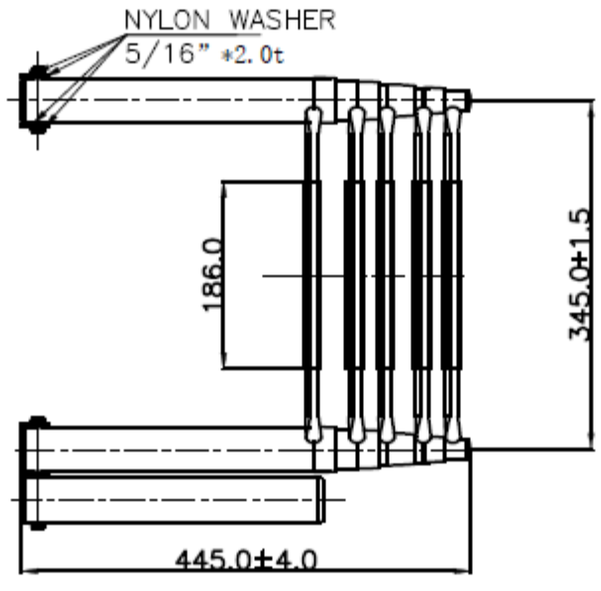


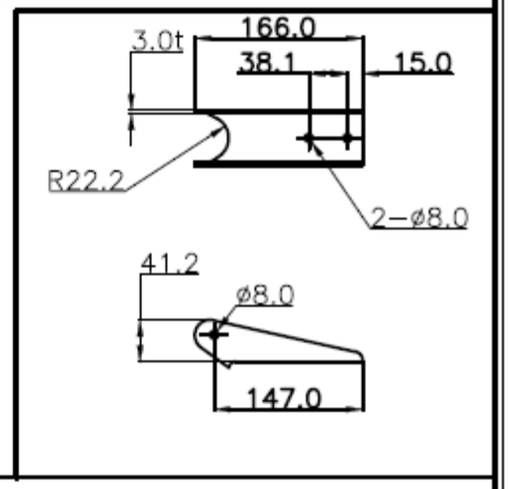


Unless otherwise specified; tolerances are:
1. Wall Thickness = ±5%
2. Angles = ±2°
3. Profile dimensions fit : ISO JS13

★ INDICATES "CRITICAL TO QUALITY" DIMENSION

REMOVE BURRS AND SHARP CORNERS 0.10-0.25

# OSCULATI

| | | | | |
|---|---|---|---|---|
| Drawn: B.L | Date: 2011.12.14 | | | |
| Checked: | Date: | M'TL: SUS316 | Scale: | 49.551.05 |
| Approved: | Date: | Weight: g | Dimensions: M/M | |
| Projection: | A4H | Finish: | SHEET OF | |

| Ecn | Revisions | Description | Date | Revised |
|---|---|---|---|---|
| | | | | |